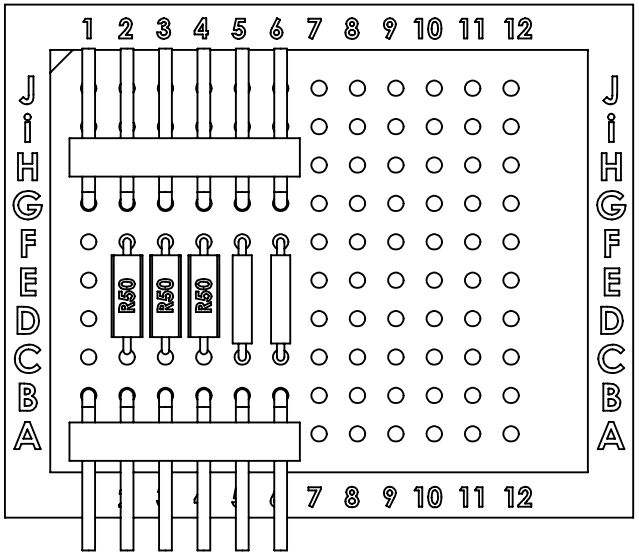

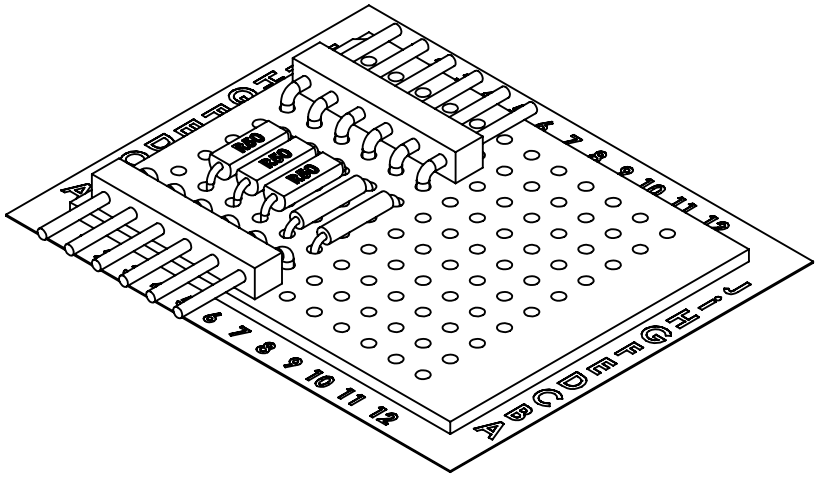

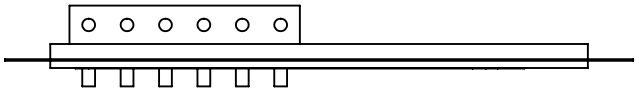

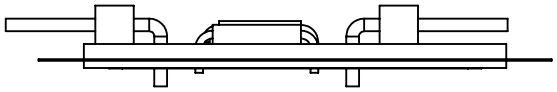

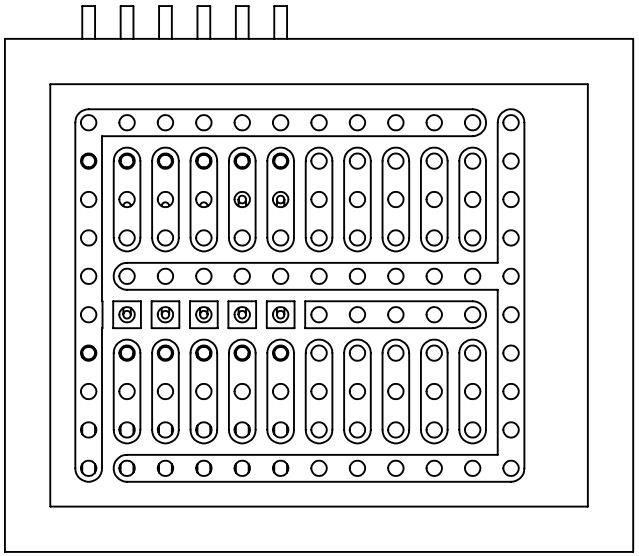

STELLA -- NASA GSFC

LS-C2 cuvette drop board

Paul Mirel 20260418